EN2091 11/12/2025

ANALOG FUNCTION GENERATOR

µSquad
Hasith Nettikumara
Minaya Fernando
Rusiru Anupama
Kavija Karunarathna

01

WHAT DID WE BUILD?

FROM CONCEPT TO REALITY

This project focuses on designing an analog function generator capable of producing clean sine, square, triangular, and sawtooth waveforms. Using only transistors and op-amps, we developed a circuit that offers adjustable frequency, amplitude, and duty cycle, similar to commercial generators but fully built from scratch.

02

PRODUCING THE BIG 3

COMBINED SQUARE–TRIANGLE–SAWTOOTH GENERATOR

The square, triangle, and sawtooth waveforms are all produced using one shared block built around a comparator + integrator + diode shaping network.
This is a classic analog function-generator topology used in many commercial designs.

01 SQUARE WAVE

02 TRIANGLE WAVE

03 SAWTOOTH WAVE

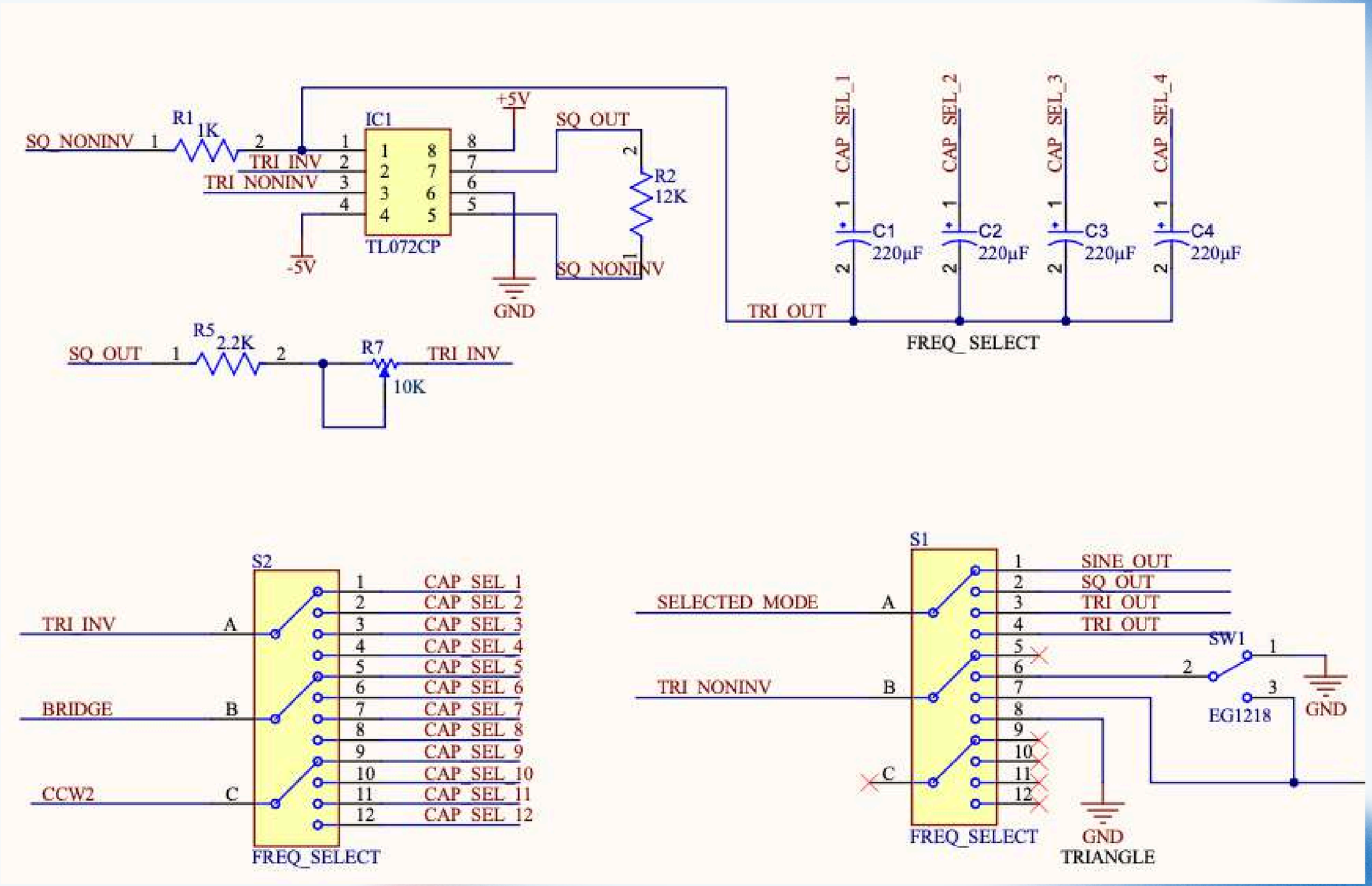
SQ_NONINV
R1
1K
TRI_INV
TRI_NONINV
IC1
TL072CP
+5V
-5V
GND
SQ_OUT
R2
12K
SQ_NONINV
CAP_SEL_1
CAP_SEL_2
CAP_SEL_3
CAP_SEL_4
C1
C2
C3
C4
220µF
TRI_OUT
FREQ_SELECT
SQ_OUT
R5
2.2K
R7
10K
TRI_INV
S2
TRI_INV
BRIDGE
CCW2
CAP_SEL_1
CAP_SEL_2
CAP_SEL_3
CAP_SEL_4
CAP_SEL_5
CAP_SEL_6
CAP_SEL_7
CAP_SEL_8
CAP_SEL_9
CAP_SEL_10
CAP_SEL_11
CAP_SEL_12
FREQ_SELECT
S1
SELECTED_MODE
TRI_NONINV
SINE_OUT
SQ_OUT
TRI_OUT
TRI_OUT
SW1
EG1218
GND
FREQ_SELECT
GND
TRIANGLE

04

01 A TL072 op-amp is wired as a comparator with positive feedback (Schmitt trigger).

02 A capacitor in the feedback path determines how long the comparator waits before switching again.

03 The comparator toggles rapidly between +V and –V whenever the input crosses its threshold.

04 The square wave is the master timing signal. Its output is fed directly into the integrator, where it becomes the triangle wave.

SQUARE WAVE

THE CORE OSCILLATOR

TRIANGLE WAVE

INTEGRATING THE SQUARE WAVE

The square wave is fed into an op-amp integrator made from a resistor, a timing capacitor, and a stabilizing feedback network. Since a square wave spends equal time at +V and –V, the integrator responds by producing linear ramps: +V causes the output to ramp downward, while –V causes it to ramp upward. This process naturally generates a clean and highly symmetric triangle waveform.

The integrator's slope depends entirely on the timing capacitor and input resistor, meaning the triangle wave's frequency can be changed simply by switching capacitors. Because the square wave driving the integrator is very stable, the resulting triangle waveform is equally stable, producing predictable and consistent frequencies across different ranges.

05

SAWTOOTH WAVE

- Sawtooth is created by feeding the integrator a non-50% duty-cycle square wave.
- When the square wave stays high longer than low, the integrator ramps slowly in one direction and quickly in the other.
- This asymmetric ramping produces the classic sawtooth shape.
- Adjusting the duty cycle directly controls the slope ratio of the rise vs. fall.

06

WIEN-BRIDGE OSCILLATOR

SINE WAVE

A

The sine wave is generated separately using a Wien Bridge Oscillator, a classic low-distortion analog sine generator.

B

It uses an op-amp with a lead-lag RC network that provides positive feedback only at one specific frequency.

C

Our design switches different capacitor values to select different sine-wave frequency ranges.

D

The Wien bridge produces a pure sinusoidal waveform because its RC network shapes the feedback into a smooth, rounded signal.

E

Amplitude is kept stable through automatic gain control in the op-amp stage (preventing clipping or decay).

F

This method is widely used in lab-grade function generators due to its low distortion and excellent stability.

POWER SUPPLY

- The circuit uses a dual-rail power supply to support both analog and output-drive stages.
- Voltage regulators 7815, 7915, 7805, and 7905 provide stable ±15 V and ±5 V rails.
- The ±15 V rails power the op-amps that generate and shape the waveforms.
- The ±5 V rails are used for biasing, reference levels, and low-voltage stages.
- Filtering capacitors smooth out the regulator outputs, reducing ripple and noise.
- This ensures the oscillators and integrators operate with clean, stable supply voltages, improving waveform quality and reducing distortion.

08

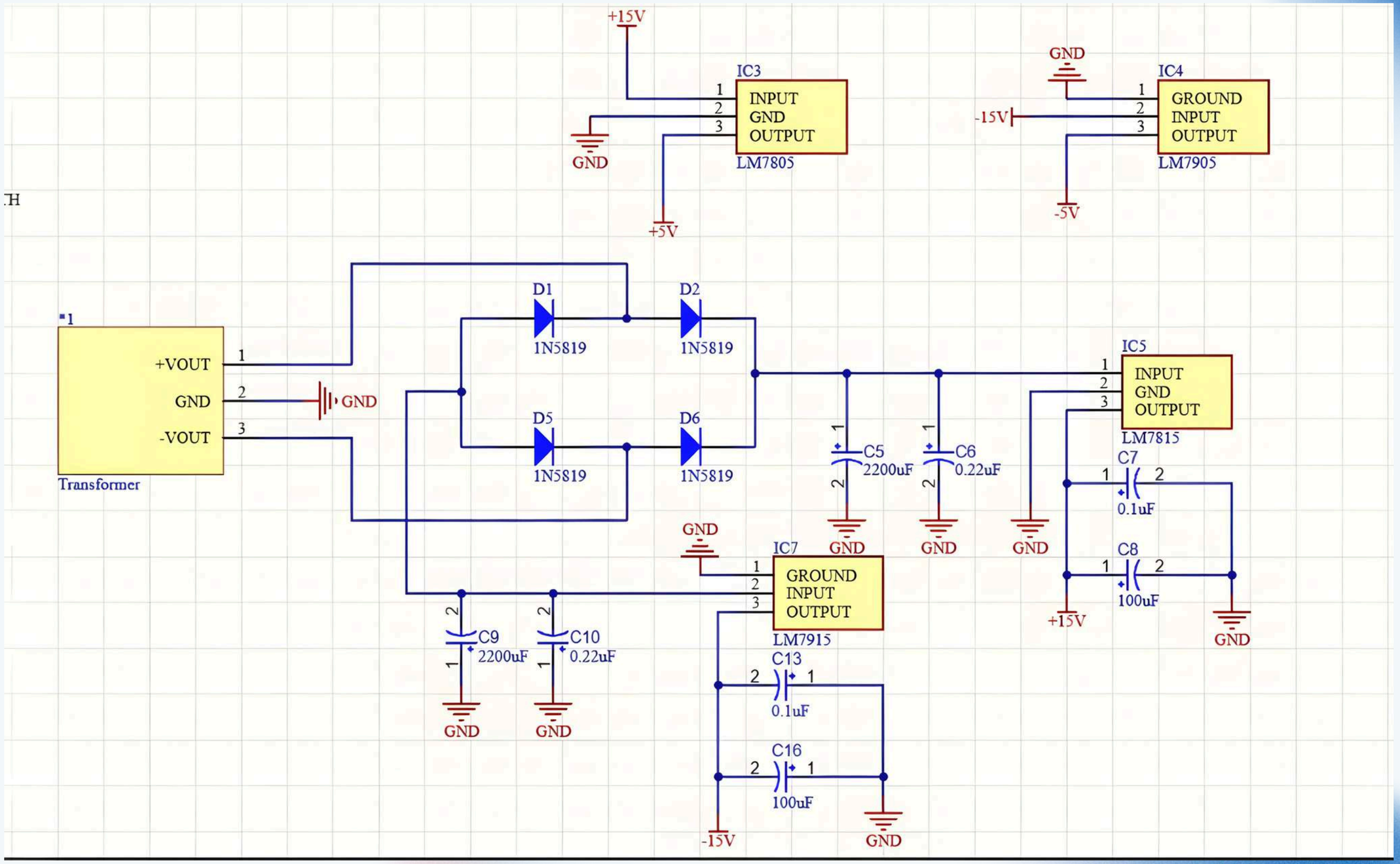
+15V
IC3
INPUT
GND
OUTPUT
LM7805
GND
+5V
GND
IC4
GROUND
INPUT
OUTPUT
LM7905
-15V
-5V
.H
*1
+VOUT
GND
-VOUT
Transformer
GND
D1
1N5819
D2
1N5819
D5
1N5819
D6
1N5819
C5
2200uF
C6
0.22uF
IC5
INPUT
GND
OUTPUT
LM7815
C7
0.1uF
C8
100uF
+15V
GND
IC7
GROUND
INPUT
OUTPUT
LM7915
C9
2200uF
C10
0.22uF
C13
0.1uF
C16
100uF
-15V

PRINTED CIRCUIT BOARD

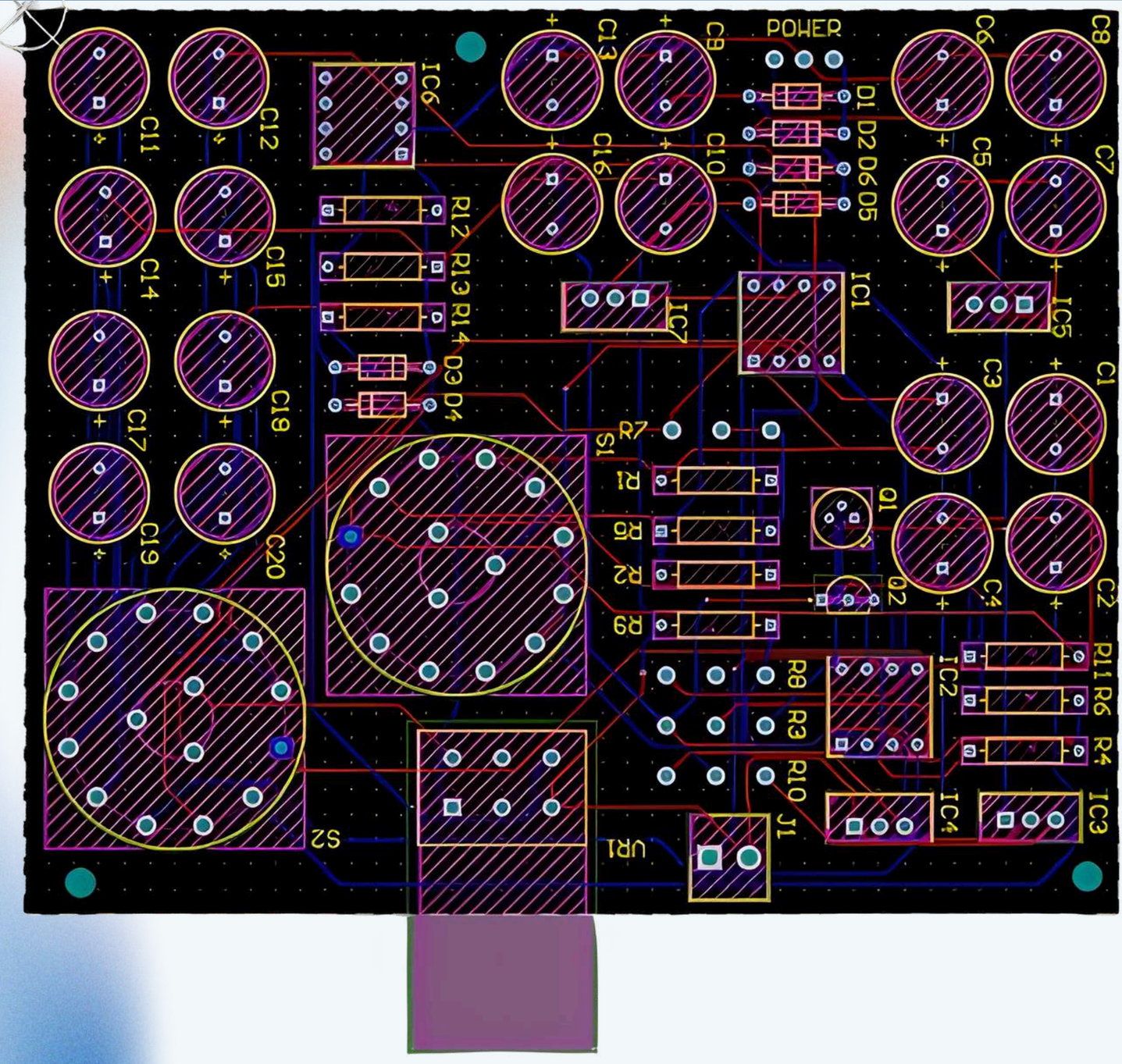
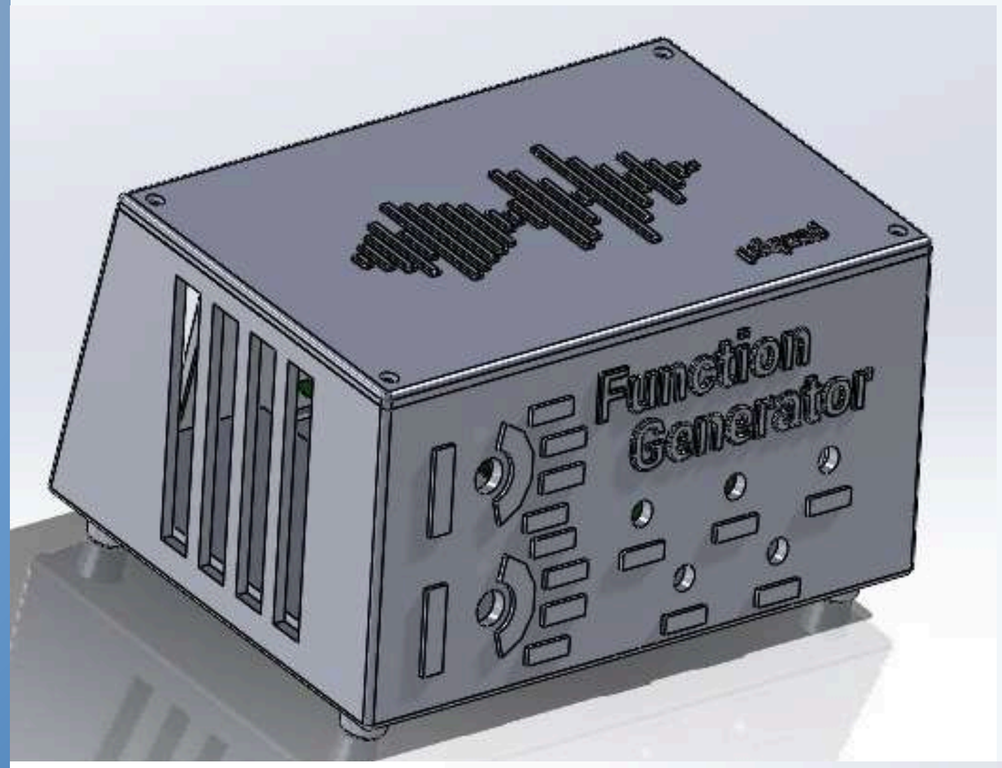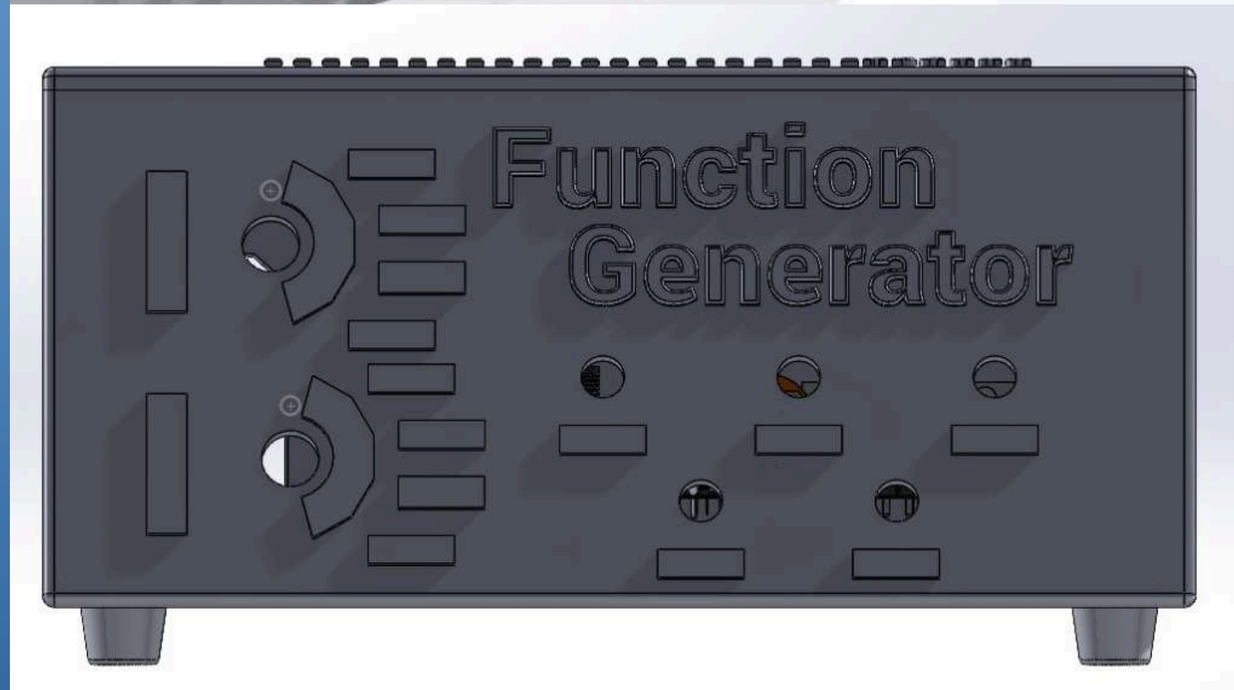
ENCLOSURE DESIGN